Magnetic Field Exposure Assessment of Lineman Brain Model during Live Line Maintenance

M. A. Abd-Allah
Department of Electrical Engineering
University of Benha
Shoubra St. 108, Cairo, ARE
mousa_abdulah@yahoo.com

Reda E. Morsi
Department of Electrical Engineering
University of Benha
Shoubra St. 108, Cairo, ARE
redamorsi@yahoo.com

***Abstract* - Live working leads to considerable magnetic field exposures, associated with acute effects on the one hand, and increased the dose with the possible long-term effects on the other hand. This acute exposure results in increasing the induced voltage, the induced current density, and the specific absorption rate at the different sections in the human body. The magnetic field can be as high as 450 μT in the brain model near the lower phase conductor. The Typical induced current density values inside the human model brain can be as high as 5.5 mA/m^2 at the top of the left upper side of the brain model near the lower phase conductor. Typical specific absorption rates (SAR) values reach as high as 24x10^{-9} watts/Kg at the top of the left side of the brain model near the lower phase conductor. The maximum temperature increase ΔT in the brain tissue during one work hour, with considering the maximum value of the specific absorption rate, can be 20.7x10^{-9} ^{o}K near the lower phase conductor which is very low and can be neglected with power frequency fields.**

Index Terms – Magnetic field exposure-Lineman brain model-Live line maintenance-Induced current density-Specific absorption rates (SAR)

I. INTRODUCTION

The interaction of very low frequency with living tissues is an attractive subject in the last few years. Many studies about the biological effects of the electric power facilities have been carried out in various countries throughout the world [1-4]. The analysis of the interaction between the magnetic fields and the living organisms is one of the main topics in these research activities.

The extremely low frequency (ELF) magnetic field penetrates completely the tissues of a human body. It induces electric fields, current density within the tissues. The mass-normalized rates of electromagnetic energy absorption and the temperature increase in the human organs tissue are also important factors in quantifying the interaction between magnetic fields and live organisms. Different international organizations have established levels of recommended maximum exposure [5-7], for workers as well as for people that find themselves exposed occasionally to electromagnetic fields. Exposure recommendations in force are given by the council of the European Union and the International Commission on Non-Ionizing Radiation Protection (ICNIRP). The recommended current density value is 2 mA/m^2 for public exposure. For occupational exposure the recommended value is 10mA/m^2 given by ICNIRP.

Live line work began from about 40 years ago. It enables repair and maintenance work to be carried out on the transmission network without any interruption of the power. Live line work was begin firstly on low voltage level lines, then after 10 years the work on the high voltage and EHV lines were begin. There are three basic methods that are used in live working on transmission lines namely; gloving, stick and bare hand methods. In gloving method the linemen use insulating gloves, sleeves as their primary personal protective equipment and this method is applicable to distribution voltages up to 33 kV. In stick method the lineman is at the ground potential or floating maintain a specified distance from live parts and carry out their work using tools that are attached to insulating poles or sticks, and this method is applicable to voltages up to 132 kV. In bare hand method the lineman is in direct contact with energized parts and separated from ground by air or insulating equipment, the lineman uses an insulating ladder, insulating aerial device or helicopter and this method is applicable to voltages from 66 kV and above.

On the other hand, the linemen work very near to the line phases, especially in the bare hand method, so the linemen are exposed to very large amount of the magnetic fields which leads to heavy amount of the induced voltages and consequently increase the induced currents in the different body organs [8, 9].

This paper evaluates the exposure of the lineman brain to magnetic fields. Some of the carefully performed experimental works show that at least some effects depend on the induced electric fields and currents in biological systems. The others showed that the rise in the human organs temperatures, due to the electromagnetic energy absorption, have a great effect on these organs. So it is very necessary to compute all the parameters such as; induced currents in different organs in the living bodies subjected to these fields, the distributions of the mass-normalized rates of electromagnetic energy absorption, i.e., specific absorption rates, or SAR. Also it is necessary to compute the total power absorbed and the temperature increase in the brain tissue

II. HUMAN BRAIN MODELING

Magnetic fields were computed in the space surrounding the line. The lineman body model with standard 175cm length is placed near the lower and the central phase conductors, Fig.1, at which the incident magnetic fields on the normal cross section of the human brain were computed. The human brain is modeled by a spheroidal model. The values of the mean volume, the electrical conductivity and the mass density of the human brain are taken as 810 cm^3, 0.7 S/m and 1700 Kg/m^3 [10].

The human brain is modeled by a sphere with a radius 5.78 cm. It is assumed that the brain model is filled with a homogenous biological tissue. The horizontal components B_x and B_y of the external magnetic fields relate to the x-axis and y-axis, respectively. The vertical component B_z of external magnetic field relate to the z-axis. The lineman model is placed at positions near the lower and middle phase conductors.

The problem can be considered as quasi-static, since the dimensions of the human body are small compared to the wavelength of the power-frequency. Two additional simplifications of the problem result from the electrical properties of tissues. Biological materials are non-magnetic, and as a consequence the magnetic permeability μ is equal to that of the free space μ_o. It can be shown that the secondary magnetic field produced in tissue by the current flow induced by the external magnetic field can be neglected for frequencies at which the following condition is satisfied [1]:

$$f\,\mu_o\,\sigma\,L^2 << 1 \tag{1}$$

Where, f is the frequency, σ is the conductivity, and L is the maximum dimension of the body. Additionally, at the 50 Hz the permittivity components ε' and σ (where ε' is the dielectric constant) satisfy the following conditions:

$$\sigma >> 2\,\pi\,f\,\varepsilon' \tag{2}$$

The internal electric fields vectors in x; y and z-axis resulting from the three orientations of the sinusoidal magnetic fields are expressed as:

$$\vec{E}_{Bx} = \frac{\omega}{2}(z\hat{y} - y\hat{z})\left|\dot{B}_x\right| e^{j(-\pi/2+\varphi_{Bx})} \tag{3}$$

$$\vec{E}_{By} = \frac{\omega}{2}(x\hat{z} - z\hat{x})\left|\dot{B}_y\right| e^{j(-\pi/2+\varphi_{By})} \tag{4}$$

$$\vec{E}_{Bz} = \frac{\omega}{2}(y\hat{x} - x\hat{y})\left|\dot{B}_z\right| e^{j(-\pi/2+\varphi_{Bz})} \tag{5}$$

Where, E_{Bx} is an electric field around x-axis induced by B_x, E_{By} is an electric field around y-axis induced by B_y and E_{Bz} is an electric field around z-axis induced by B_z. Moreover, the angular frequency $\omega=2\pi f$ where f is 60 Hz and φ is the phase angles of B_x, B_y and B_z.

The total induced electric field in the model can be expressed as:

$$\overline{E} = \overline{E}_{Bx} + \overline{E}_{By} + \overline{E}_{Bz} \tag{6}$$

The total current density induced by magnetic fields is obtained from

$$\overline{J} = \sigma\overline{E} \tag{7}$$

For comparison purposes, a base human body conductivity of 0.1 S/m may be assumed, and circulating currents are computed accordingly. For any given organ the true current density can be modified simply by multiplying the base values by the ratio of the actual organ conductivity to the base conductivity.

The specific absorption rate (SAR) is the mass-normalized rates of electromagnetic energy absorption, i.e. the energy per unit mass, and is given by

$$SAR = \frac{\sigma|E|^2}{\rho_m} \tag{8}$$

Where, ρ_m is the mass density of the material in the human brain and it is taken as 1700 kg/m^3.
The question of how much energy is absorbed by the humans should be answered as quantitatively as possible. The SAR of the field-exposed organ of the human body indicates the rate of magnetic energy absorption by that organ. This quantity helps in assessing the environmental impact of the magnetic fields.

Integrating the average power density ($\sigma\,|E|^2 / 2$) over the spherical brain model volume, gives the total power absorbed by the human brain exposed to the incident magnetic field. The power absorbed by the human brain model is given by:

$$P = \frac{0.2}{3}\ \sigma\ \pi\ R^5\omega^2 B^2 \qquad \text{Watt} \tag{9}$$

Where, ω is the angular velocity in radians, B is the average magnetic flux density in T. As a worst-assessment one can estimate the temperature increase ΔT in the brain tissue by using:

$$\Delta T = \frac{SAR.t_E}{C_s} \quad (10)$$

Where t_E is the exposure time and C_s is the specific heat of the brain tissue which can be taken as 4182 J/Kg.°K.

III. RESULTS AND DISCUSSION

The human body model used for the evaluation of magnetic field exposure is situated in close proximity to a 380 kV transmission line lower and middle phase conductors to simulate a live line maintenance positions. The line is a double circuit line, the phase conductors are 4x500 mm^2 with a sub-conductor spacing of 40 cm and a minimum clearance to ground of 10 m, Fig. 1. The line is fully loaded with 1600A per phase.

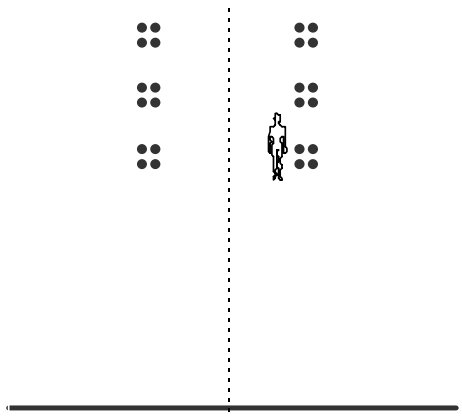

Fig. 1 Human body model near the lower phase conductor

The magnetic field is computed in human model brain; where the normal cross section of the brain is divided into 1400 points at which the magnetic field, the current density and the SAR are computed. The equi-field contours are drawn as shown in Fig. 2. The magnetic field near the lower phase conductor is varied from about 410 μT to about 450 μT from the left of the upper side to the right of the lower side of the human model brain, i.e. the magnetic field varied by about 10% along the human brain at this situation.

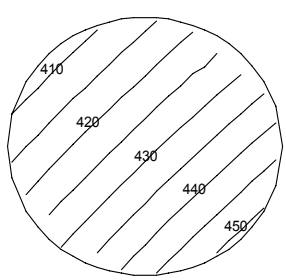

Fig. 2 Magnetic field contours inside the brain model at lower phase conductor

The induced current density in the human model brain is computed on the cross-sectional plane of symmetry through the spheroidal brain model and the equi-current density contours near the lower phase conductor is drew and showed in Fig. 3. The highest values appear to take place on the side nearer to the phase conductor. Typical induced current density values can be as high as 5.5 mA/m^2 at the top of the left upper side of the brain model near the lower phase conductor.

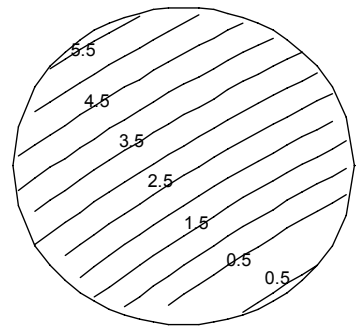

Fig. 3 Equi-Induced current density (mA/m^2) contours inside the brain model near lower phase conductor

The contours of equal specific absorption rate (SAR) over the cross sectional plane of symmetry along a human brain model near the lower phase conductor are shown in Fig. 4. Typical SAR values can be as high as $24x10^{-9}$ watts/Kg at the top of the left side of the brain model near the lower phase conductor.

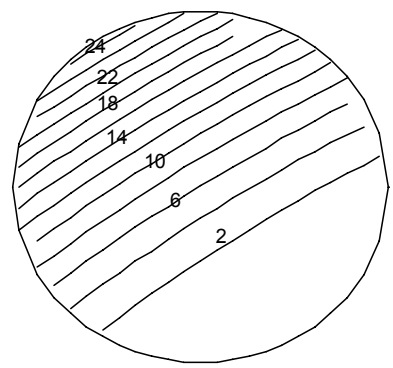

Fig. 4 Equi-SAR contours (watt/Kgx10^{-9}) inside the human model brain near the lower phase conductor

Fig. 5 shows the equi-field contours in the brain model near the middle phase conductor. The magnetic field is varied from about 290 μT to about 325 μT from the left upper side to the right of the lower side of the brain model, i.e. the magnetic field is varied by about 11%. Although the human model brain is small in dimensions, the magnetic field is varied considerably. This considerable field variation is due to the near of the organ from the line phases.

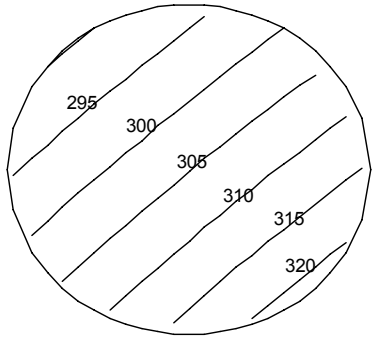

Fig. 5 Magnetic field contours inside the brain model at middle phase conductor

Fig. 6 shows the equi-current density in the cross-sectional plane of symmetry of the human model brain near the middle phase conductor. The induced current density can be as high as 3.3 mA/m^2 at the top of the left side of the model near the middle phase conductor. The distribution is showed a homogeneous distribution in the upper brain part and inhomogeneous distribution in the lower part.

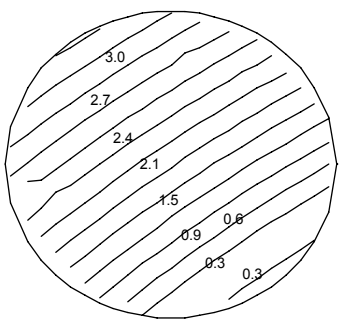

Fig. 6 Equi-Induced current density (mA/m^2) contours inside the brain model near middle phase conductor

Fig. 7 shows the contours of equal specific absorption rate (SAR) over the cross sectional plane of symmetry along a human brain model near the middle phase conductor. Typical SAR values reach as high as 13x10^{-9} watts/kg at the top of the left side of the brain model near the middle phase conductor.

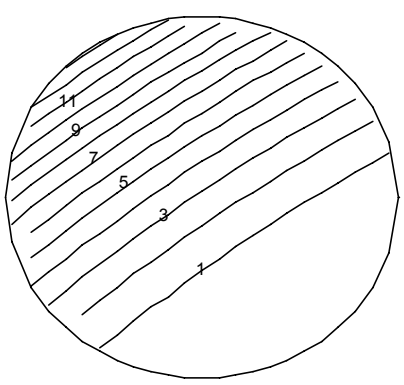

Fig. 7 Equi-SAR contours (watt/Kgx10^{-9}) inside the human model brain near the middle phase conductor

Power absorbed

The total power absorbed by the human brain model near the lower phase conductor is about 2.722x10^{-9} watt, while the total power absorbed by the human brain model near the middle phase conductor is about 1.42x10^{-9} watt.

With considering the maximum value of the specific absorption rate the temperature increase ΔT in the brain tissue during one work hour can be 20.7x10^{-9} ^{o}K near the lower phase conductor, while near the middle phase conductor can be 11.2x10^{-9} ^{o}K.

IV. CONCLUSIONS

The current densities, the specific absorption rate, the power absorbed and the temperature rise are important factors to evaluate the biological effects associated with the exposure to extremely low frequency ELF magnetic fields. These factors depend on the characteristics of the human body organs tissues and the characteristics of the external magnetic fields. Magnetic fields in the vicinity of the phase conductors of extra-high voltage power lines were evaluated.

At the lineman position near the lower phase conductor the magnetic field is varied by about 10% from the left of the upper side to the right of the lower side of the brain model; while near the middle phase conductor it varies by about 11% from the left of the upper side to the right of the lower side of the brain model. The magnetic field can be as high as 450 μT in the brain model near the lower phase conductor.

The induced current densities in the human model brain are computed near the lower and middle phase conductors. The Typical induced current density values inside the human model brain can be as high as 5.5 mA/m^2 at the top of the left upper side of the brain model near the lower phase conductor.

The highest values of the SAR appear to take place on the side nearer to the lower phase conductor. Typical SAR values reach as high as 24x10^{-9} watts/Kg at the top of the left side of the brain model near the lower phase conductor.

Although the human model brain exposed to high values of magnetic field, the total absorbed power by the human model brain is small. This can be referred to the fact that the model exposed to a low frequency magnetic field. The highest value of the total power absorbed by the human brain model is about 2.722x10^{-9} watt near the lower phase conductor. The maximum temperature increase ΔT in the brain tissue during one work hour, with considering the maximum value of the specific absorption rate, can be 20.7x10^{-9} ^{o}K near the lower phase conductor.

REFERENCES

[1] M. A. Abd-Allah, "Magnetic Field-Induced Currents in Human Body in the Proximity of Power Lines", IEEE General Meeting, Toronto, Canada, July 13-17, 2003.

[2] D. L. Henshaw, "Does Our Electricity Distribution system Pose a Serious Risk to Public Health", Medical Hypotheses, Vol. 59, no. 1, pp. 39-51, 2002.

[3] T. Keikko, S. Kuusiluoma and L. Korpinen, "Exposure to Electric and Magnetic Fields of Electric Power Systems", IEEE, pp.2352-2356, 2002.

[4] T. Matsumoto, N. Hayashi and K. Isaka, "Analysis of Induced Current Density in Ellipsoidal Human Model Exposed to Concurrent ELF Electric and Magnetic Fields with Phase Differences", IEEE , pp. 2343-2347, 2002.

[5] International Commission of Non Ionizing Radiation Protection (ICNIRP), "Guidelines For Limiting Exposure to Time Varying Electric, Magnetic and Electromagnetic Fields (up to 3000 GHz)", Health Physics, Vol. 74, no. 4, pp. 494-522, April 1998.

[6] National Research Council, "Possible Health Effects of Exposure to Residential Electric and Magnetic Fields", National Academy Press, Washington, USA, 1997.

[7] Australian Radiation Protection and Nuclear Safety Agency, "Electricity and Health", 2003.

[8] M. A. Abd-Allah, "Quantification of Interaction Between ELF Magnetic Fields and Human Body Organs in The Proximity of Power Lines", XIVth International Symposium on High Voltage Engineering, China, Paper C-19, August 25-29, 2005.

[9] B. Hutzler, et. al., "Exposure to 50 Hz Magnetic Fields During Live Work", CIGRE, Paper 36-106, Paris, 1994.

[10] Hennery Gray, Anatomy of The Human Body, Twentieth Edition, Bartleby.com, New York, 2000.